Competition between Payment Networks

Sujit Chakravorti Roberto Roson *

January 9, 2004

Abstract

In this article, we construct a model to study competing payment networks, where networks offer differentiated products in terms of costs and benefits to consumers and merchants. We study market equilibria for a variety of market structures: duopolistic competition and cartel, symmetric and asymmetric networks, and alternative assumptions about multihoming and consumer preferences. We find that competition unambiguously increases consumer and merchant welfare. Furthermore, if consumers singlehome and merchants multihome, competition typically benefits consumers more than merchants. We extend this analysis to competition among payment networks providing different payment networks and find similar results.

JEL Classifications: D43, G21, L13

Key words: two-sided markets, payment systems, network externalities, imperfect competition

*Chakravorti: Research Department, Federal Reserve Bank of Chicago, 230 S. LaSalle Street, Chicago, IL 60604, U.S.A. E-mail: `sujit.chakravorti@chi.frb.org`. Roson: Economics Department, Universita' Ca' Foscari di Venezia, Cannaregio S. Giobbe 873, 30121 Venice, Italy. E-mail: `roson@unive.it`. The views expressed are not necessarily those of the Federal Reserve Bank of Chicago or the Federal Reserve System.

1 Introduction

Recently, antitrust authorities and courts in several jurisdictions have investigated the business practices of payment networks. In the United States, the Government sued MasterCard and Visa alleging anticompetitive business practices. The court ruled that MasterCard and Visa must allow financial institutions to issue competitor network credit cards such as American Express and Discover. In another U.S. case that was settled out of court, around 5 million U.S. merchants sued the two card associations alleging an illegal tying of the associations offline debit cards and credit cards.[1] The card associations agreed to unbundle their offline debit card branded product from their credit card branded product. In Australia, the Reserve Bank of Australia set rules for the determination of interchange fees, removed no-surcharge restrictions, and reduced barriers for entry to the market for credit card services (see Reserve Bank of Australia (2002)). The authorities in the European Commission and the United Kingdom have also investigated the business practices of the card associations. These investigations have resulted in the development of several theoretical models to study pricing of payment services.

A significant part of this literature builds upon the two-sided network literature (see Armstrong (2002) and Rochet and Tirole (2002)). In two-sided networks, there are two types of end-users and each type benefits from an increase in the other type's usage. The challenge for providers of two-sided network goods is to convince both types of consumers to purchase the good. This literature also stresses that suppliers of two-sided goods may charge different prices for each type of end-user.

In this paper, we study the pricing strategies of payment networks that maximize the joint profits earned from both types of end-users. Recent investigations of these markets have focused on the determination of various prices including interchange fees, merchant discounts, and retail prices of goods and services within a single payment platform (see Chakravorti and Emmons (2003), Chakravorti and To (2003), Schmalensee (2002), Schwartz and Vincent (2002), and Wright (2003a) and Wright (2003b)).[2] Often policy discussions have focused on whether each participant is paying her fair share of the underlying cost of the payment service.

Recently, Guthrie and Wright (2003) and Rochet and Tirole (2003) have investigated pricing decisions by payment networks when there are competing payment platforms. We build upon these two papers by considering joint distributions

[1] For more discussion of these cases, see Chakravorti (2003).

[2] For summary of these papers and others, see Chakravorti (2003) .

for consumer and merchant benefits from participating on each network. In other words, each consumer and merchant is assigned a specific level of benefit from participating on each network. Consumers and merchants base their payment network usage decision on the difference between their individual benefit and the network fee. First, we focus on the case where consumers choose to participate in only one payment network, often referred to in the literature as singlehoming, and merchants that are able to accept payment products from both networks, often referred to as multihoming. Second, we consider the case where consumers multihome and merchants singlehome. Furthermore, we consider competition among payment networks providing similar services such as different brands of credit cards and providing different services such as credit cards and debit cards.

We consider three types of market structures for payment networks: cartel, non-cooperative duopoly under product differentiation, and Bertrand duopoly (price competition for homogeneous products). We find that competition unambiguously improves consumer and merchant welfare while reducing the profits of payment networks. We find that networks typically compete on fees to the side of the market that singlehomes.

2 Literature Review

While the literature on network effects is well established (see Farrell and Saloner (1985) and Katz and Shapiro (1985)), this literature ignores how to price services for two different sets of consumers where each set of consumer benefits from an increased level of participation by the other. Recently, several papers have investigated price structures in two-sided markets with network effects. Armstrong (2002), Caillaud and Jullien (2001), Jullien (2001), Rochet and Tirole (2003), and Schiff (2003) explore platform competition for various industries. A major contribution of this literature is that different types of consumers may not share equally in the costs of providing the good or service. Much of the results depend on the accessibility of different types of consumers to different platforms, the underlying fee structure, and their demands for services from a specific platform.

An example of a two-sided market with network effects is the market for payment services. Payment providers, usually via participating in a network, offer payment services to both payors, those making payment, and payees, those receiving payments. Most of the literature about two-sided payment services has only considered one payment platform.

Baxter (1983) models a four-party open network consisting of consumers, merchants, and their respective banks.[3] Payment providers charge consumers and merchants usage fees. The merchant's payment provider usually pays an interchange fee to the consumer's payment provider.[4] He finds that to balance the demands for payment services by consumers and merchants, an interchange fee may be required to compensate the financial institution that serves the group that benefits less and/or faces higher costs to bring that group on board. Rochet and Tirole (2002), Wright (2003a), and Wright (2003b) expand on Baxter by considering the effects of strategic interactions among payment system participants on the determination of the interchange fee.

Rochet and Tirole (2003) consider platform competition generally and investigate some characteristics of payment markets. First, they provide a general framework to model platform competition that is applicable to various markets. Second, they are able to characterize the determinants of price allocation between end-users. There may be instances where one end-user subsidizes the other. Third, they find that the seller's price (could be viewed as the merchant discount in the payment services context) increases with captive buyers (buyers could be viewed as consumers in the payments context) and decreases when there are marquee buyers under certain conditions. Similarly, the buyer's price moves in the opposite direction. Captive buyers prefer to use a certain platform and marquee buyers are coveted by sellers.

Guthrie and Wright (2003) also model competing payment networks where merchants use card acceptance as a strategic tool. Their main result is that when consumers hold only one card, competition between payment networks does not result in a lower interchange fee. However, if some consumers are able to hold more than one card, equilibrium interchange fees are lower if merchants are monopolists. If merchants compete for customers, merchants are willing to pay higher interchange fees potentially erasing any reduction in interchange fees.

Schiff (2003) explores platform competition in a Cournot duopoly, focusing on the effects of benefit asymmetry, for the two sides, on the market equilibria. He finds that multiple equilibria may occur for some parameter values. He

[3]There are also closed or proprietary networks where one entity serves all consumers and merchants that are members and operates the network. Examples of such networks include American Express in the United States and Discover.

[4]The level and determination of the fee has been investigated in several jurisdictions such as Australia, the European Commission, the United Kingdom, and the United States. For a discussion about regulating interchange fees, see Ahlborn, Chang, and Evans (2001), Balto (2000), and Katz (2001).

also considers the possibility of having "open systems," where subscribing to a network gives access to all agents on the other side of the market (independent of their network affiliations). In his framework, competing platforms have incentives to make their systems open.[5]

In this paper, we focus on competing payment networks that offer payment instruments that have independent benefits and costs for consumers and merchants. We study the effects of network competition on the allocation of prices and the welfare of consumers and merchants.

3 The Model

We construct a one-period model of payment network competition with three types of agents. There are two payment network operators. There are a continuum of consumers and a continuum of merchants each of unitary mass. Consumers demand one unit of each good and purchase goods from each merchant.

To focus on the choice of payment instrument, consumers and merchants derive utility based on the type of payment instrument used. There are three payment instruments. Cash is the default payment instrument available to all consumers and merchants at zero cost yielding zero utility for both consumers and merchants.[6] There are two payment networks each offering a payment product that is associated with positive benefits for most consumers and merchants. These networks may offer similar products such as different types of credit cards or offer different types of instruments such as credit and debit cards. Each network provides services to both consumers and merchants directly and must recover the total cost of providing these services.

The total benefits, obtained by a consumer from being a member of a network, is given by a per-transaction benefit, h_i^c, multiplied by the proportion of merchants accepting the payment product, D_i^m. For each consumer per-transaction benefits, h_i^c, are independently distributed via a cumulative distribution with support $[0, \tau_i]$, where $i \in \{1, 2\}$ is an index referring to the specific payment network. Unlike Guthrie and Wright, network benefits are platform-specific and are independent from another. Consumer benefits may include convenience, extension of short-

[5]This is equivalent to a special access regime (peering) used, especially, on the Internet. The economics of peering access is investigated in Little and Wright (2000), and Roson (2003).

[6]In reality, there are merchants that do not accept cash. For example, merchants collecting payments via mail generally do not accept cash.

term and long-term credit, security, and status.[7]

Consumers pay an annual fee, f_i^c, to access the payment system, allowing them to make an unlimited number of payments.[8] We assume f_i^c is sufficiently high such that each consumer holds only one card. Utility from card holding is given by the difference between total benefits from all transactions and the fee. Therefore, the total benefit to consumers increases as merchant acceptance increases.[9] Once a consumer becomes a member of a payment network, we assume the consumer uses that network's payment product exclusively with merchants that accept it. In other words, non-cash purchases dominate cash purchases for those consumers that are members of a payment network.

Each merchant is a monopolist selling an unique good.[10] Merchant benefits could include security, convenience, and status. Merchants pay a per-transaction fee for each transaction, f_i^m, but cannot set different prices based on the payment instrument used.[11] A payment type will be accepted whenever the per-transaction benefit h_i^m (which is drawn randomly from a cumulative distribution function F_i^m, with support $[0, \mu_i]$) exceeds the per-transaction fee. Note that: (1) acceptance choices are independent, and (2) acceptance does not depend on the number of consumers that are members of that payment network whereas a consumer's choice depends on the number of merchants accepting the payment card.[12] There are three types of merchants. Those that accept neither of the payment network's

[7] Brito and Hartley (1995) and Chakravorti and Emmons (2003) suggest that credit card loans may be significantly more valuable than the cost of borrowing implying a relatively high net benefit.

[8] While most U.S. issuers do not impose annual fees, some credit cards and debit issuers that offer additional enhancements such as frequent-use awards impose annual fees. Generally, most European issuers impose annual fees.

[9] We assume that the fixed fee is sufficiently high so that consumers will only carry one network's payment instrument. Given the marginal cost for card usage is zero, consumers will prefer to use this instrument for all transactions. Similar arguments have been made for check usage in the United States, see Chakravorti and McHugh (2002).

[10] Note that by construction, we ignore business stealing effects. Other models, such as Guthrie and Wright (2003), have shown that business stealing incentives may allow network operators to charge higher fees to merchants.

[11] Pricing restrictions on merchants may take various forms. Non-discrimination pricing polices prohibit merchants from setting different prices based on the payment instrument used. In the United States, merchants are allowed to extend discounts for purchases made with non-credit card payment forms. However, card association rules usually prohibit surcharges for credit card purchases. For a discussion of U.S. history on differentiated pricing, see Chakravorti and Shah (2003).

[12] Clearly, if merchants are restricted to choosing only one payment network, the number of consumers that are members of a payment network would affect the merchants' choice of networks.

products because the benefit from accepting them is lower than the fee charged. Other merchants will only accept one of the payment network's products because while the net benefit of one network is positive, the other is negative. Finally, some merchants will accept both non-cash payment products because there are positive benefits from doing so.

To sum up, utility for the representative consumer, U^c, and merchant, U^m, can be expressed as:

$$U^c = \max\{0, h_1^c D_1^m - f_1^c, h_2^c D_2^m - f_2^c\} \tag{1}$$

$$U^m = \max\{0, D_1^c(h_1^m - f_1^m)\} + \max\{0, D_2^c(h_2^m - f_2^m)\} \tag{2}$$

where D_i^c is the proportion of consumers holding network i's instrument and D_i^m is the proportion of merchants accepting network i's product.[13]

Payment networks face two kinds of costs: a consumer fixed cost, g_i, and a merchant per-transaction cost, c_i. Networks maximize the following:

$$\Pi_i = (f_i^c - g_i)D_i^c + (f_i^m - c_i)D_i^c D_i^m \tag{3}$$

Networks choose simultaneously and non-cooperatively the consumer and merchant fees, taking the other network choices as given (a Nash equilibrium). Timing is as follows:

- Consumer and merchant benefits are randomly drawn;
- Networks maximize profits, by choosing f_i^c and f_i^m;
- Merchants decide which payment forms to accept;
- Consumers decide which payment option to purchase;
- Transactions are realized.

The proportion of accepting merchants is determined, on the basis of the distribution function F_i^m:

$$D_i^m = 1 - F_i^m(f_i^m) \tag{4}$$

[13]Because we assume that consumers singlehome and always prefer to use non-cash payment alternatives, we equate membership in a payment network with usage of its product when merchants accept the payment product.

Note that merchants accept non-cash payment alternatives as long as their benefits from doing so are greater than their costs. Because merchants only face per-transaction fees, they need only have one consumer using the network's product to accept it as long as the benefit is greater than the cost.

The consumer side of the market is more complicated. To be chosen, a card has to pass two tests: (1) consumers must derive positive utility, and (2) the utility derived from this payment form must be higher than the other payment form. The market shares can be identified as in figure 1, where each consumer is mapped to a point, whose coordinates $(h_i^c D_i^m, h_j^c D_j^m)$ express total potential benefits from using card i or j.

In figure 1, the large rectangle is divided into six parts. Consumers falling inside the smaller rectangle in the bottom left do not join either payment network, as their benefits are smaller than the membership fees of either network. Other consumers become members of either payment network i if in rectangle B or payment network j if in rectangle A. When both networks are associated with positive utility, consumers choose on the basis of relative utility, and the border between the two market areas is given by the 45 degree segment that splits the square into triangles C and D. Consumers in area E also choose a network on the basis of relative utility, but their choice is primarily determined by the number of accepting merchants. For this reason, only the network offering the highest consumer surplus $(\tau D^m - f^c)$ attracts consumers in an area like E, which is absent if networks are symmetric and apply equal prices to both consumers and merchants.

Assuming uniform random variables for consumer benefits for each payment product, the market share of consumers for each network can be written as:

$$D_i^c = \frac{(m_i - f_i^c)f_j^c + .5w^2 + (m_i - f_i^c - w)w}{m_i m_j} \tag{5}$$

and

$$D_j^c = \frac{(m_j - f_j^c)f_i^c + .5w^2 + (m_j - f_j^c - w)w}{m_i m_j} \tag{6}$$

where:

$$w = \min(m_i - f_i^c, m_j - f_j^c)$$
$$m_i = \tau_i D_i^m \qquad m_j = \tau_j D_j^m$$

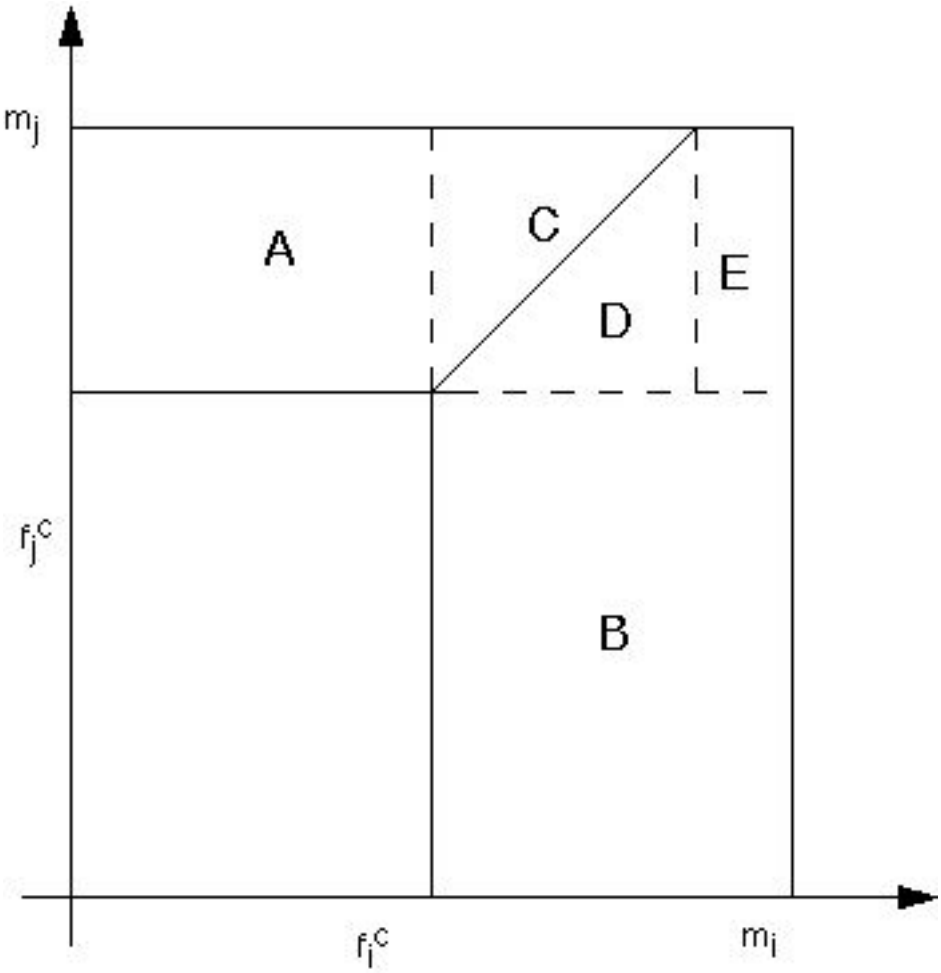

Figure 1: Network's share of consumers

Profit Maximization
When choosing the consumer and merchant fees, f_i^c and f_i^m, each payment network maximizes profits, given by equation 3. It may be shown that optimal fees obey the following principle:

Proposition 1 *Profit maximizing fees can be determined on the basis of the 'modified Rochet-Tirole rule' that is:*[14]

$$p^c + f^m - c = \frac{p^c}{\epsilon^c} = \frac{f^m}{\epsilon^m + \epsilon^{cm} - \epsilon^m \epsilon^c} \tag{7}$$

where $p^c = \frac{f^c - g}{D^m}$ *is the per-transaction revenue obtained from a consumer, and:*

$$\epsilon^c = \frac{\partial D^c}{\partial p^c}\frac{p^c}{D^c} = \frac{\partial D^c}{\partial f^c}\frac{1}{(f^c - g)D^c}$$

$$\epsilon^{cm} = \frac{\partial D^c}{\partial f^m}\frac{f^m}{D^c}$$

$$\epsilon^m = \frac{\partial D^m}{\partial f^m}\frac{f^m}{D^m}$$

Proof. Following Rochet and Tirole (2003), substitute into equation 3, and consider the following problem:

$$\max_{p_i^c, f_i^m} \log \Pi_i = \log(p_i^c + f_i^m - c_i) + \log D_i^c + \log D_i^m \tag{8}$$

Assuming log-concavity, equation 7 is obtained from simple manipulations of first-order conditions of the maximization problem 8, observing that:

$$\frac{\partial p^c}{\partial f^m} = -\frac{f^c - g}{(D^m)^2}\frac{\partial D^m}{\partial f^m} = \frac{p^c}{f^m}\epsilon^m \qquad \blacksquare$$

Proposition 1 highlights that the problem of setting optimal fees can be decomposed in two parts: the choice of the global price level $p_i^c + f_i^m$, and the problem of balancing the relative prices p_i^c / f_i^m.

[14] Rochet and Tirole (2003) derive first order conditions for profit maximization, for the general case of arbitrary variable and fixed costs on both sides of the market. In deriving these conditions, however, they disregard the effect of a variation of network size in the price level. Equation 7 translates the result of Rochet and Tirole for our case, while taking into account the effect of network size on the consumer price.

When demand functions are expressed as in equations 4, 5, 6, and 7, and the distribution of merchant benefits is uniform in the interval $[0, \mu]$, network elasticities are:

$$\begin{aligned}
\epsilon_i^c &= \frac{f_i^c + w}{(f_i^c - g)\tau_i \tau_j D_i^m D_j^m D_i^c} \\
\epsilon_i^{cm} &= \frac{\tau_i f_i^m (f_i^c + w)}{\mu_i \tau_i \tau_j D_i^m D_j^m D_i^c} - \frac{\tau_i f_i^m}{\mu_i \tau_i^2 \tau_j (D_i^m)^2 D_j^m} \\
\epsilon_i^m &= \frac{f_i^m}{\mu_i D_i^m}
\end{aligned} \tag{9}$$

The Effects of Competition on Prices and Welfare

To see how competition affects the market equilibrium, we now consider two cases: a duopoly, where each network maximizes its profits, assuming the competitor's fees as given, and a monopoly, where an hypothetical cartel maximizes the sum of the two networks' profits. The difference between the two cases is given by the fact that a monopolist internalizes any pecuniary externality, that is, any effect of a price change in the other operator's profit. In other words, the cartel maximizes the sum of the two profit functions, as defined in equation 3. Furthermore, as the following proposition states, pecuniary externalities have a non-ambiguous effect on price levels and welfare.

Proposition 2 *In the market for payment services defined above, prices in duopoly are always lower than in monopoly, so that competition is always welfare enhancing for both consumers and merchants. Indeed, lower merchant fees increase merchant welfare if consumer fees do not rise, and lower consumer fees increase consumer welfare if merchant fees do not rise. In addition, consumer welfare also increases because more merchants are accepting cards and vice versa.*

Proof. Cross-effects on profits operate through changes in the consumers' demand volume:

$$\begin{aligned}
\frac{\partial \Pi_i}{\partial f_j^c} &= (f_i^c - g)\frac{\partial D_i^c}{\partial f_j^c} + (f_i^m - c) D_i^m \frac{\partial D_i^c}{\partial f_j^c} \\
\frac{\partial \Pi_i}{\partial f_j^m} &= (f_i^c - g)\frac{\partial D_i^c}{\partial f_j^m} + (f_i^m - c) D_i^m \frac{\partial D_i^c}{\partial f_j^m}
\end{aligned} \tag{10}$$

Cross price derivatives (and elasticities) are, in general, discontinuous, but they can be written in a compact way, using the notation introduced above:

$$\frac{\partial D_i^c}{\partial f_j^c} = \frac{w}{m_i m_j} > 0 \tag{11}$$

$$\begin{aligned}\frac{\partial D_i^c}{\partial f_j^m} &= \frac{\partial D_i^c}{\partial m_j}\frac{\partial m_j}{\partial f_j^m} \qquad (12)\\ &= \left(\frac{m_i - f_i^c - w}{m_i m_j} - \frac{D_i^c}{m_j}\right)\frac{-\tau_j}{\mu_j}\\ &= \begin{cases} \frac{D_i^c}{m_j}\frac{\tau_j}{\mu_j} > 0 & w = m_i - f_i^c \\ \\ \frac{(m_j)^2-(f_j^c)^2}{2m_i(m_j)^2}\frac{\tau_j}{\mu_j} > 0 & w = m_j - f_j^c \end{cases}\end{aligned}$$

An increase in both merchant and consumer fees applied by the competitor network expands the consumer demand for the network. Consequently, the profit of a network increases if the competitor raises its prices. This is the conventional pecuniary externality due to competition. The perceived price elasticity of a competitive network will always be larger than that of a monopolistic cartel, and competition unambiguously reduces both merchant and consumer fees. ■

It is important to understand that we retain the existence of two alternative platforms, even in the monopolistic setting. On the contrary, Schiff (2003) considers a monopoly with a single platform, finding that welfare may improve when switching from duopolistic competition to monopoly. Prices actually increase, but a single standard is imposed, which is beneficial in the presence of network externalities. This result may not hold in our model, however, because we consider network-specific preferences. Therefore, like in a monopolistic competition model, the trade-off between economies of scale and "taste for variety " should be taken into account.

Symmetric Competition

If networks are perfectly symmetric, equilibrium prices, in all market structures, must be equal. Guthrie and Wright (2003) consider some cases of symmetric competition between payment platforms. They focus solely on the price balance effect of competition, because they consider either a bank association with fixed margins on the two market sides, or proprietary schemes subject to Bertrand-like

competition, dissipating profits. This implies that, in their model, total revenue is constant in all market structures.

In our model, market competition reduces prices and increases merchant and consumer welfare. However, the price reduction is not, in general, uniform in the two sub-markets. To see this, consider the effects of a reduction in merchant and consumer fees on the other network's demand volume. Figure 2 provides a graphical illustration of changes in market sizes generated by a reduction of consumer fee, whereas figure 3 provides a representation of the effects of a merchant fee reduction.

When the consumer fee is reduced in a network, the network's demand expands because some new customers are convinced to choose this platform. Among these customers, some were not subscribing to any card before, whereas some others are now switching from the other network.

A reduction in a merchant fee, on the other hand, has only an indirect effect on the other network demand. A reduction in the merchant fee affects the merchant's demand, which in turn affects the consumer's demand: m shifts outwards. The area corresponding to the competing network's market share does not change, but the *density* of the consumers in the rectangle becomes lower.

Because of this "stretching effect" some consumers, previously associated with points slightly to the left of the 45 degree segment in figure 3, are now found to the right of this dividing line, in another market area.[15] These consumers are switching to the alternative network, not because consumer fees are lower there, but because there is a larger base of accepting merchants.

In a monopolistic two-sided market, a network operator selects the prices so as to balance the two sides of the market (to get "both sides on board"). Under competition, the competitive pressure may be different in the two sub-markets, and the price structure, which emerges in equilibrium, depends on the different market conditions. In other words, competition does not simply drive the prices down, but also alters the balance of prices.

In our model, a key factor, determining the relative degree of competition between the two market sides, is given by:

$$-\frac{\partial m}{\partial f^m} = \frac{\tau}{\mu}$$

that is, the factor translating a reduction in f^m into an outward shifting of m. The greater the ratio $\frac{\tau}{\mu}$, the more intense the competition on the merchant side, relative

[15] Also, some previous non-subscribers, initially in the smaller lower left rectangle, are moved rightward into the market area.

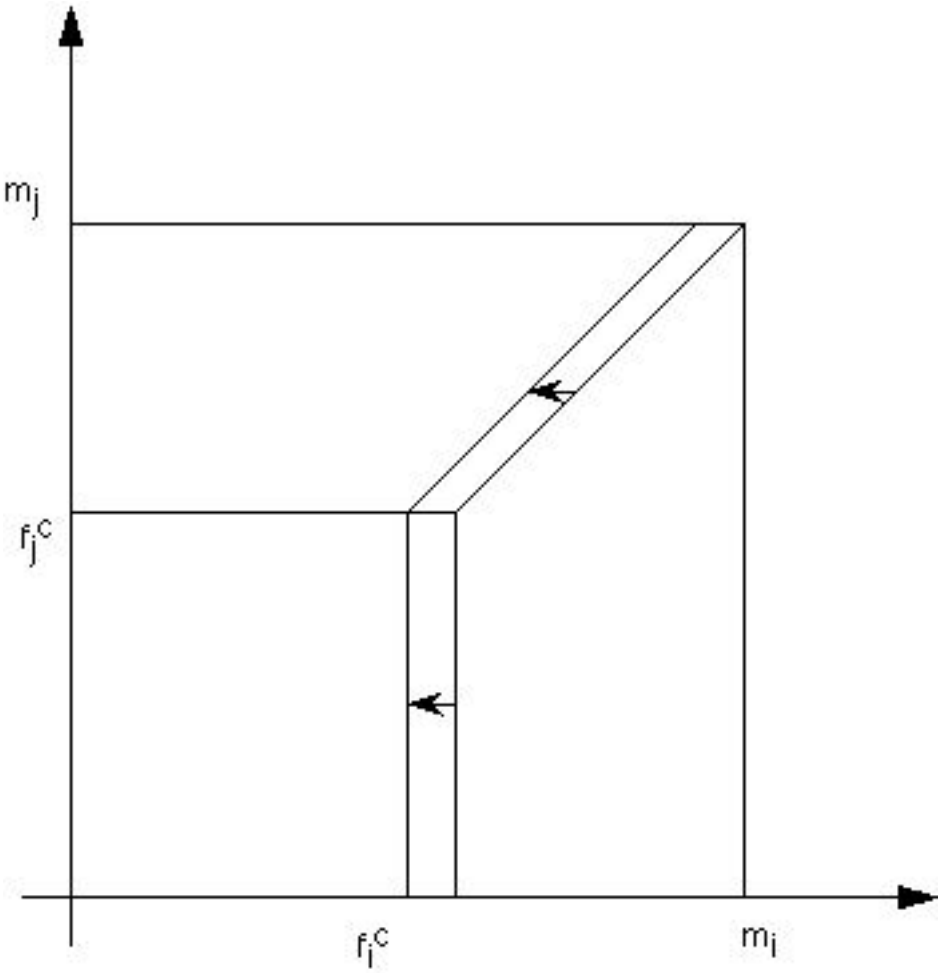

Figure 2: Market share effects of a reduction in a consumer fee

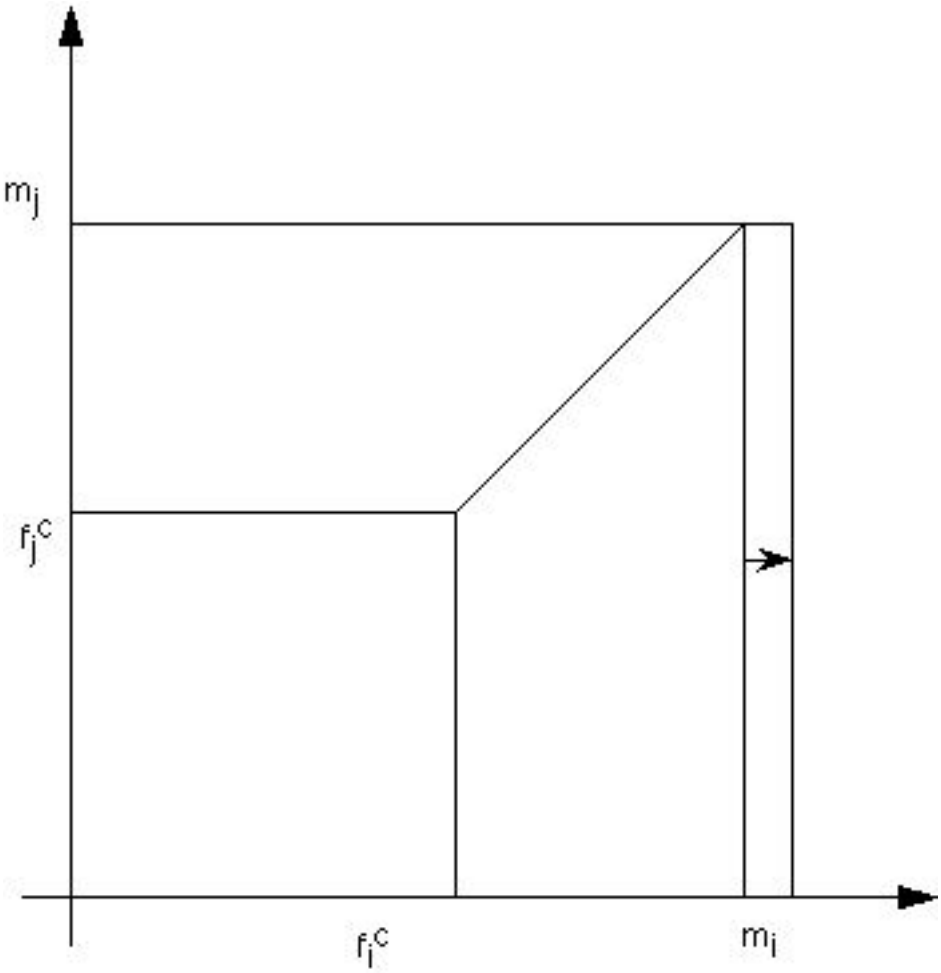

Figure 3: Market share effects of a reduction in a merchant fee

to the one on the consumer side, because more customers are attracted from the competing network through a reduction in the merchant fee.

We provide simulations of various equilibria to demonstrate relationships between different market structures. Table 1 presents parameter values, equilibrium fees, profits, network consumer and merchant shares, and total transaction shares for a series of symmetric duopolistic and monopolistic market equilibria. The first four columns give parameter values: customer fixed costs, transaction costs, upper end of the merchant benefits distribution, upper end of the consumer benefits distribution. The parameters are not indexed, because they are identical for both networks. The subsequent four columns give equilibrium values for consumer and merchant fees, their ratios, and equilibrium profits. The next three columns show each network's share of consumers and merchants and its total share of non-cash transactions.

Table 1A shows equilibrium values for each firm under duopolistic Nash competition and table 1B shows equilibrium values of each firm when the two firms operate as a cartel. The results show that for all parameter values the duopolistic competition results in lower consumer and merchant fees, higher consumer and merchant shares and a greater number of total transactions.

In two cases consumer fees or merchant fees are zero in the duopolistic market.[16] As expected from our previous discussion, this is a consequence of $\mu \ll \tau$, or $\mu \gg \tau$, making one side of the market significantly more competitive than the other.

Table 1: Symmetric Competition

A: Duopolistic

g	c	μ	τ	f^c	f^m	f^c/f^m	Π	D^c	D^m	$D^c D^m$
0	0	1	1	.181	.236	.767	.170	.471	.764	.360
0	0.5	1	1	.248	.449	.552	.087	.397	.551	.219
0.2	0	1	1	.360	.199	1.809	.127	.398	.801	.319
0	0	2	1	0	.666	0	.222	.499	.667	.333
0	0	1	2	.828	0		.343	.414	1	.414

[16] We do not allow negative fees, resulting in zero being the lowest fee.

B: Cartel

g	c	μ	τ	f^c	f^m	f^c/f^m	Π	D^c	D^m	$D^c D^m$
0	0	1	1	.376	.248	1.516	.211	.375	.752	.282
0	0.5	1	1	.326	.451	.723	.096	.324	.549	.178
0.2	0	1	1	.474	.202	2.347	.141	.324	.798	.259
0	0	2	1	.218	.813	.268	.302	.433	.594	.257
0	0	1	2	1.155	0		.385	.333	1	.333

The fee for merchants does not significantly change in the two market structures. However, the fees to consumers changes drastically from the duopoly to the cartel. In column 7, we compute the ratio of consumer fees and merchant fees. We find that the ratio increases for all parameter values except the last one. For the last set of parameter values, we find that consumer fees increase in the cartel structure as well, whereas merchant fees are zero in both cases.

The reason why consumers gain relatively more, in most cases, from market competition, is explained in the following proposition.

Proposition 3 *In the symmetric market, there is more competitive pressure on the consumer side if, in the monopolistic equilibrium:*

$$\frac{f^c}{D^m} \leq 2\mu - \tau \tag{13}$$

Proof. Starting from a symmetric equilibrium, suppose that either f_j^c or f_j^m are marginally decreased. In both cases, $w = m_i - f_i^c$. Using this value for w in equations 11 and 12, we find that the marginal change in the consumer demand of the competing network, determining the pecuniary externality on profits (and the relative competitive pressure), is higher for the variation in consumer fees if:

$$|\frac{\partial D_i^c}{\partial f_j^c}| \geq |\frac{\partial D_i^c}{\partial f_j^m}| \Rightarrow \frac{m - f^c}{m} \geq \frac{\tau}{\mu}\frac{(m - f^c)[f^c + .5(m - f^c)]}{m^2} \tag{14}$$

where we dropped subscripts, for notational convenience, and we made use of the definition of demand 5 or 6. Condition 13 is obtained from simple manipulations of 14. ■

The following corollary can be immediately derived:

Corollary 1 *A sufficient condition for the ratio between consumer and merchant fees to increase under competition is :*

$$\tau \geq 2\mu \tag{15}$$

What is the meaning of τ and μ ? They are both parameters determining the amplitude of the interval of the (uniform) distribution function of transactional benefits for consumers (τ) and merchants (μ).

If the support of a distribution function is larger, there is more differentiation among agents. When $\tau \geq 2\mu$ a marginal change in the consumer fee produce little effects on the consumer demand, but a marginal change in the merchant fee produce relatively large variations in the merchant demand. As a consequence, the duopolistic networks compete more vigorously on the merchant sub-market, and merchant fees decrease relatively more if condition 15 is met.[17]

Asymmetric Competition

Most real markets involve competition between asymmetric players. For example, debit and credit cards are competing payment instruments, although they differ in terms of cost structure and services provided to consumers and merchants. Such competition has been investigated by the courts in the United States and by regulators in other parts of the world. We are not aware of any theoretical models that have attempted to investigate such competition.

Unfortunately, the analysis of asymmetric competition in the model illustrated above is very complex, and general analytical results cannot be readily obtained. Yet, useful insights can be gained through a combination of numerical examples and a careful inspection of optimization condition 7, which still hold, in general, under asymmetry.

A simple way to address the issue is to start from a symmetric equilibrium and consider a marginal change in a specific cost or demand parameter, for one of the two networks. How will this perturbation of symmetry conditions affect the market equilibrium? This question can usefully be decomposed into two parts: (a) how will this change induce different aggregate price levels? (b) how will asymmetric conditions affect the balance between relative prices on the two sides of the market?

The first sub-question has a quite straightforward answer. The model considered here is reminiscent of an asymmetric Hotelling model, and results are similar. In an asymmetric Hotelling duopoly, consumers are evenly distributed along

[17] In our numerical examples, this occurs only in the last case.

a [0,1] segment, with one firm located at point 0 and the other one located at point $1+\Delta$. Consumers buy one unit of a good, selecting the firm associated with the minimum total cost, which is the sum of producer price and transportation cost. In this case, it can be easily shown that (with full market coverage) prices applied by the first firm (and profits) are an increasing function of the parameter Δ, whereas the opposite occurs for the competitor. Analogously, in our model any cost increase, or any positive change in consumer/merchant preferences, will induce higher (aggregate) prices by a firm and a reaction by its competitor, which lowers its own (aggregate) prices.

In addition, the price balance between the two market sides also changes, because elasticities in equation 7 vary. Rochet and Tirole (2003) notice that an increase in the own price elasticity (on one sub-market) induces an *increase* in the relative price applied in that sub-market. In our framework, however, this holds true only for the per-transaction consumer price.

Table 2 presents equilibrium prices and demand volumes under asymmetric duopolistic competition and collusion, for a variety of parameter values. The cases could be interpreted as simulating (in a rather simplistic way) competition between a debit card network (network 2) and a credit card network (network 1). The latter is assumed to have higher customer costs and to provide more benefits to consumers (such as credit) and potentially, to merchants.

The effects of competition on the asymmetric market are not qualitatively different from the ones obtained under symmetry. This should not come as a surprise, as the sign of pecuniary externalities in equations 11 and 12 were derived for the general case.

More interestingly, relative prices, both in competition and in collusion, move in opposite directions, when parameter values for one network are changed from the symmetric benchmark. In all circumstances, when fees on one side of the market are lowered by a network, the other network reacts by lowering fees on the opposite market side.

Table 2: Asymmetric Competition

A. Duopoly

Network 1

g	c	μ	τ	f^c	f^m	f^c/f^m	Π	D^c	D^m	D^cD^m
0.1	0	1	1.1	.328	.176	1.864	.153	.410	.824	.338
0.1	0.5	1	1.1	.397	.372	1.067	.068	.312	.628	.196
0.1	0	1.1	1.1	.285	.235	1.213	.158	.427	.786	.336
0.1	0.5	1.1	1.1	.363	.434	.836	.075	.335	.605	.203

Network 2

g	c	μ	τ	f^c	f^m	f^c/f^m	Π	D^c	D^m	D^cD^m
0.0	0	1.0	1.0	.190	.255	.745	.189	.496	.745	.370
0	0.5	1	1	.249	.461	.540	.096	.420	.539	.226
0	0	1	1	.188	.250	.752	.184	.489	.750	.367
0	0.5	1	1	.249	.459	.542	.093	.412	.541	.223

B. Cartel

Network 1

g	c	μ	τ	f^c	f^m	f^c/f^m	Π	D^c	D^m	D^cD^m
0.1	0	1	1.1	.522	.177	2.950	.177	.311	.823	.256
0.1	0.5	1	1.1	.474	.371	1.278	.071	.244	.629	.153
0.1	0	1.1	1.1	.480	.238	2.017	.186	.327	.784	.256
0.1	0.5	1.1	1.1	.442	.432	1.023	.080	.266	.607	.162

Network 2

g	c	μ	τ	f^c	f^m	f^c/f^m	Π	D^c	D^m	D^cD^m
0.0	0	1.0	1.0	.349	.265	1.317	.225	.413	.735	.304
0	0.5	1	1	.307	.464	.662	.104	.363	.536	.195
0	0	1	1	.356	.261	1.364	.221	.403	.739	.298
0	0.5	1	1	.311	.461	.675	.102	.350	.539	.189

4 Alternative Fee Structures and Assumptions

In this section, we consider alternative fee structures and assumptions and discuss how our results might be affected.

Reversed Multihoming

Consider the case where merchants pay fixed fees and consumers pay per-transaction fees. In the United States, some banks have started to charge per-transaction fees for online debit cards. Some observers of payment markets have suggested that the fixed fees associated with installing personal identification number pads may keep certain merchants from accepting them.

Given that consumers pay fixed fees and can only choose to be a member of one network, we found that consumers consider the number of merchants that accept a certain payment product in their decision to purchase payment services from that network. However, merchants only consider the net benefits of accepting cards for a single transaction because they multihome. Reversing who pays fixed fees and singlehomes and who pays per-transaction fees and multihomes, we would expect to see merchants choosing to accept payment cards based on the number of consumers that carry them and consumers choosing to hold both payment products because there is no cost in doing so.

Nonetheless, the results obtained from our model still hold, if the two market sides are switched. This can be easily done by re-interpreting all variables and parameters with a m superscript as referred to the consumers, and all variables and parameters with a c superscript as referred to the merchants.

Bertrand-like Competition

Instead of assuming that benefits are independently drawn for each payment network, consider the opposite polar case of perfect correlation. For example, a consumer may value the possibility of making credit card transactions, irrespective of the type of card. Yet, cards may be qualitatively differentiated. Basic benefits are the same for the two payment instruments, although they are consumer-specific.

This case can be accommodated by assuming that a uniform random variable x in the interval $[0, 1]$ is drawn for each consumer, and basic benefits are obtained by multiplying this variable by (network-specific) maximum basic benefits τ_i . In this case:

$$U^c = \max\{0, x\tau_1 D_1^m - f_1^c, x\tau_2 D_2^m - f_2^c\} \tag{16}$$

Again, to be chosen, a card must provide net benefits:

$$x\tau_i D_i^m \geq f_i^c \Rightarrow x \geq \min\left(1, \frac{f_i^c}{\tau_i D_i^m}\right) \tag{17}$$

and it must be better than the alternative one. Using the indifference condition:

$$x\tau_i D_i^m - f_i^c = x\tau_j D_j^m - f_j^c \tag{18}$$

we can define two sets, $[0, x]$ and $[x, 1]$, identifying the range of values of x, for which one network is preferred to the other.[18]

The market share of a network is given by the intersection of this "preference set" and the set defined by equation 17. Of course, this intersection may be empty. There is one exception: when total maximum benefits and consumer fees are equal, the two market areas overlap and the consumer is indifferent between the two cards. In this case, we can assume that the market is equally split.

To understand how prices are set in a symmetric duopolistic equilibrium, start from arbitrary initial fee levels. On the consumer side, total demand would then be determined by the viability condition 17. From this point on, a slight reduction in the consumer fee or, equivalently, in the merchant fee, could allow each competitor to conquer the whole market (although total demand would change only marginally). That is, each competitor has an incentive to undercut *either* by lowering the consumer fee *or* by lowering the merchant fee.

The outcome is a special type of Bertrand price war with two instruments and the equilibrium is found when profits are dissipated. Each network tries to offer higher net benefits to the subscribing consumers. In equilibrium, consumer net benefits are maximized, under the constraint of non-negative profit for the networks.[19]

This result is a direct consequence of the perfect correlation in the distribution of consumers' benefits. In real markets, consumers are likely to have both 'brand preferences' and 'payment tool preferences,' irrespective of brand. In terms of Figure 1, consumers would then be located inside a positively sloped 'cloud' of points, and the market equilibrium would fall somewhere in between the two polar cases analyzed in this paper (perfect correlation vs. independent distributions of consumer benefits).

[18] The implicit assumption here is $0 \leq x \leq 1$. Alternative cases are trivial.

[19] A similar result is found by Guthrie and Wright (2003). In their model, however, consumers get their draw of transactional benefits after having subscribed a card. This implies that consumers are ex-ante equal, when making a subscription decision.

5 Policy Implications

Recently, pricing policies of credit card networks and debit card networks have been investigated by authorities in various jurisdictions. The apparent barriers to competition in the payment card industry and its harm to consumers and merchants has been the basis for investigations by the Reserve Bank of Australia, the U.S. courts along with authorities in other jurisdictions.[20] However, few academic models address the issue of platform competition in the provision of payment services.

In this paper, we address the effect of competing payment networks on consumer and merchant welfare. We find that competition unambiguously increases consumer and merchant welfare suggesting that policymakers should promote inter-network competition among networks providing similar products and those offering different products. In certain market segments, such as grocery stores in the United States, the acceptance of lower cost alternatives such as PIN-based debit cards resulted in lower merchant discounts for MasterCard and Visa branded credit cards.[21] However, even in competitive markets, differences in merchant discounts may exist across payment instruments because differences in benefits to consumers and merchants. Furthermore, the price structure may be different across payment instruments.

However, we ignore some benefits of a single platform providing payment services or cooperation between payment networks. Payment services most likely exhibit economies of scale and scope.[22] Therefore, the cost facing a cartel may be lower than for each of the competing firms because of economies of scale and scope.

Some economists have argued that certain types governance structures may limit monopoly rents. Hausman, Leonard, and Tirole (2003) suggest that if the payment platforms are not-for-profit entities and are not allowed to share profits with members, cooperation among the networks may limit the rents that could be earned. We leave these issues for future research.

[20] For a discussion of competition among payment instruments, see Reserve Bank of Australia 2002. For a discussion of the recently settled merchant lawsuit against MasterCard and Visa, see Chakravorti (2003).

[21] Note that the benefits to grocers from credit cards may be less than other types of merchants. Some analysts have argued that some consumers may be reluctant to make food and other "necessary" good purchases on credit. For more details, see McAndrews and Stefanadis (1999).

[22] For discussion of scale and scope economies in payment services, see Chakravorti and Kobor (2003).

6 Conclusion

To date most theoretical models consider a single platform with varying levels of competition among network participants. Few theoretical models have considered competing payment platforms. In this paper, we investigate the impact of competing payment networks on consumer and merchant welfare, network profits, and the ratio of consumer and merchant prices. We find that competition always improves consumer and merchant welfare. As expected, network profits decrease with competition. The ratio of consumer and merchant prices depend on the differences in the benefits.

However, we ignore some aspects of the payment industry captured by others. Most notably, we ignore strategic reasons for merchants to accept other payment products. Guthrie and Wright (2003) consider intratemporal business stealing as a motivation for merchants to accept payment cards. We are unable to capture this effect in our model. Business stealing would affect the level of merchant fees. However, the aggregate welfare of merchants does not improve with business stealing because net sales presumably remain constant. In fact, Chakravorti and To (2003) suggest that intertemporal business stealing may decrease merchant welfare.

In reality, consumers and merchants both multihome to some extent. Unfortunately, there are difficulties in modeling an environment where consumers and merchants both multihome as noted by Rochet and Tirole (2003). In markets such as the U.S. where consumers carry several payment products, consumers may still prefer to use one payment instrument for most transactions. Alternatively, consumers may have preferences for one payment instrument based on the value and type of the transaction.

In this paper, we extend the literature on payment networks that sheds light on the effects of competition on consumer and merchant welfare by considering a specific level of benefits for each consumer and merchant for each network's payment services. While there are theoretical models that investigate network competition, these models have not been empirically tested. This type of empirical research is vital for policymakers to adopt the optimal polices regarding payment networks.

References

Ahlborn, Christian, Howard H. Chang, and David S. Evans (2001), "The Problem of Interchange Fee Analysis: Case Without a Cause," *European Competition Law Review*, **22**, 304-312.

Armstrong, Mark (2002), "*Competition in Two-Sided Markets*," Mimeo, presented at ESEM meeting in Venice.

Balto, David A. (2000) "The Problem of Interchange Fees: Costs without Benefits," *European Competition Law Review*, **21**, 215-224.

Baxter, William F. (1983), "Bank Interchange of Transactional Paper: Legal and Economic Perspectives," *Journal of Law & Economics*, **26**, 541-588.

Brito, Dagobert L. and Peter R. Hartley (1995), "Consumer Rationality and Credit Cards," *Journal of Political Economy*, **103**, 400-433.

Caillaud, Bernard and Bruno Jullien (2001), "*Chicken & Egg: Competing Matchmakers*," Mimeo.

Caillaud, Bernard and Bruno Jullien (2003), "Chicken & Egg: Competition among Intermediation Service Providers," *RAND Journal of Economics*, **24**, 309-328.

Chakravorti, Sujit (2003), "Theory of Credit Card Networks: A Survey of the Literature," *Review of Network Economics*, **2**, 50-68.

Chakravorti, Sujit and William R. Emmons (2003), "Who Pays for Credit Cards?" *Journal of Consumer Affairs*, **37**, 208-230.

Chakravorti, Sujit and Emery Kobor (2003), "Why Invest in Payment Innovations," Federal Reserve Bank of Chicago *Emerging Payments Occasional Paper Series*, No1B.

Chakravorti, Sujit and Timothy McHugh (2002), "Why Do We Write so Many Checks?" Federal Reserve Bank of Chicago *Economic Perspectives*, Third Quarter, 44-59.

Chakravorti, Sujit and Alpa Shah (2003), "The Study of the Interrelated Bilateral Transactions in Credit Card Networks," *The Antitrust Bulletin*, Spring, 53-75.

Chakravorti, Sujit and Ted To (2003), *"A Theory of Credit Cards,"* Mimeo, Federal Reserve Bank of Chicago.

Farrell, Joseph and Garth Saloner (1985), "Standardization, Compatibility and Innovation," *Rand Journal of Economics*, **16**, 70-83.

Guthrie, Graeme and Julian Wright (2003), *"Competing Payment Schemes,"* Working Paper No. 0311, Department of Economics, National University of Singapore.

Hausman, Jerry A., Gregory K. Leonard, Jean Tirole (2003), "On Nonexclusive Membership in Competing Joint Ventures," *Rand Journal of Economics*, **34**, 43-62.

Little, Ian, and Julian Wright, (2000), "Peering and Settlement in the Internet: an Economic Analysis," *Journal of Regulatory Economics*, **18**, 151-173.

Jullien, Bruno (2001), *"Competing in Network Industries: Divide and Conquer,"* Mimeo, IDEI and GREMAQ, University of Toulouse.

Katz, Michael L. (2001), *Reform of Credit Card Schemes in Australia II*, Sydney, Australia: Reserve Bank of Australia.

Katz, Michael L. and Carl Shapiro (1985), "Network Externalities, Competition, and Compatibility," *American Economic Review*, **75**, 424-440.

McAndrews, James J. and Chris Stefanadis (1999), *"The Issues of Exclusivity and Overlapping Governance in the Visa and MasterCard Antitrust Case,"* Mimeo, Federal Reserve Bank of New York.

Reserve Bank of Australia (2002), *Reform of Credit Card Schemes in Australia IV: Final Reforms and Regulation Impact Statement*, Sydney, Australia: Reserve Bank of Australia.

Rochet, Jean-Charles, and Jean Tirole (2002), "Cooperation among Competitors: The Economics of Payment Card Associations," *Rand Journal of Economics*, **33**, 549-570.

Rochet, Jean-Charles, and Jean Tirole (2003), "Platform Competition in Two-Sided Markets," *Journal of European Economic Association*, **1**, 990-1029.

Roson, Roberto (2003), “Incentives for the Expansion of Network Capacity in a Peering Free Access Settlement” *Netnomics*, **5**, 149-159.

Schiff, Aaron (2003), “Open and closed systems of two-sided networks”, *Information Economics and Policy*, forthcoming.

Schmalensee, Richard (2002), “Payment Systems and Interchange Fees,” *Journal of Industrial Economics*, **50**, 103-122.

Schwartz, Marius and Daniel R. Vincent (2002), “*Same Price, Cash or Card: Vertical Control by Payments Networks*,” Mimeo, University of Maryland.

Wright, Julian (2002), “*Why Do Firms Accept Credit Cards?*,” Mimeo.

Wright, Julian (2003a), “The Determinants of Optimal Interchange Fees in Payment Systems,” *Journal of Industrial Economics*, forthcoming.

Wright, Julian (2003b), “Optimal Card Payment Systems,” *European Economic Review*, **47**, 587-612.

Wright, Julian (2003c), “Pricing in Debit and Credit Card Schemes,” *Economics Letters*, forthcoming.